Technical sheet :

MRT 3050 PRIVILEGE PLUS



MANITOU
HANDLING YOUR WORLD

Capacities		Metric	Imperial
Max. capacity	Q	4999 kg	11021 lbs
Max. lifting height	h3	29.5 m	96 ft 9 in
Max. Reach	l4	25.8 m	84 ft 8 in
Weight and dimensions			
Overall width	b1	2.49 m	8 ft 2 in
Overall height	h17	3.05 m	10 ft
Overall cab width	b4	0.99 m	3 ft 3 in
Outer frame turning radius	Wa3	4.9 m	16 ft 1 in
Ground clearance	m4	0.35 m	1 ft 2 in
Wheelbase	y	3.25 m	10 ft 8 in
Tilt-up angle	a4	12 °	12 °
Tilt-down angle	a5	108 °	108 °
Turret rotation		360 °	360 °
Overall weight		21810 kg	48083 lbs
Forks length / width / section	l / e / s	1200 mm x45 mm x 130 mm	47.244 in x1.772 in x 5.118 in
Wheels			
Tyres type		Pneumatic	Pneumatic
Standard tyres		445/65 R22,5	445/65 R22,5
Drive wheels (front / rear)		2 / 2	2 / 2
Steering mode		2 wheel steer, 4 wheel steer, Crab mode	2 wheel steer, 4 wheel steer, Crab mode
Stabilisers			
Stabs Type		Telescopic Duplex	Telescopic Duplex
Controls with stabs		Stabs Commands Individual or Simultaneous	Stabs Commands Individual or Simultaneous
Engine			
Engine brand		Mercedes	Mercedes
Engine norm		Stage IV / Tier 4 Final	Stage IV / Tier 4 Final
Engine model		OM 934 LA.E4-3	OM 934 LA.E4-3
I.C. Engine power rating / Power (kW)		176 Hp / 129 kW	176 Hp / 129 kW
Max. torque / Engine rotation (min) / Engine rotation		750 Nm @ 1200 rpm - 1600 rpm	750 Nm @ 1200 rpm - 1600 rpm
Number of cylinders - Capacity of cylinders		4 - 5130 cm³	4 - 313.05 in³
Injection		engine Injection direct	engine Injection direct
Engine cooling system		Water	Water
Number of batteries / Battery / Batteries capacity		2 x 12 V / 120 Ah	2 x 12 V / 120 Ah
Transmission			
Transmission type		Hydrostatic	Hydrostatic
Number of gears (forward / reverse)		2 2	2 2
Max. travel speed		40 km/h	24.9 mph
Drawbar pull (Laden)		9500 daN	9500 daN
Parking brake		Automatic Negative Hand-brake	Automatic Negative Hand-brake
Service brake		Hydraulic	Hydraulic
Hydraulics			
Hydraulic pump type		Variable pump	Variable pump
Hydraulic flow		180 l/min	180 l/min
Hydraulic Pressure		350 Bar	24 PSI
Tank capacities			
Engine oil		21 l	5.55 US gal
Hydraulic oil		290 l	76.62 US gal
Fuel tank		290 l	76.62 US gal
Diesel Exhaust fluid (AdBlue® type)		57 l	15.06 US gal
Noise and vibration			
Noise at driving position (LpA)		79.7 dB(A)	79.7 dB(A)
Environmental noise (LwA)		108 dB(A)	108 dB(A)
Vibration to whole hand/arm		< 2.50 m/s²	< 2.50 m/s²
Miscellaneous			
Steering wheels (front / rear)		2 / 2	2 / 2
Controls		2 Joysticks	2 Joysticks
Safety cab homologation		ROPS - FOPS cab (level 2)	ROPS - FOPS cab (level 2)
Attachment recognition system (E-Reco)		Standard	Standard

Dimensional drawing

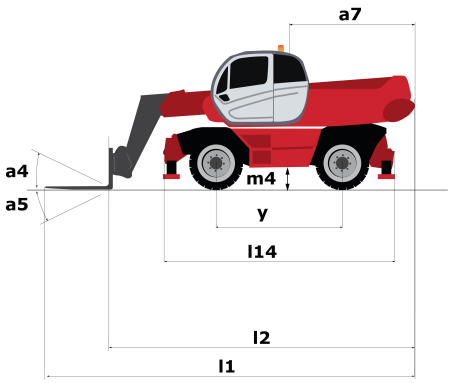

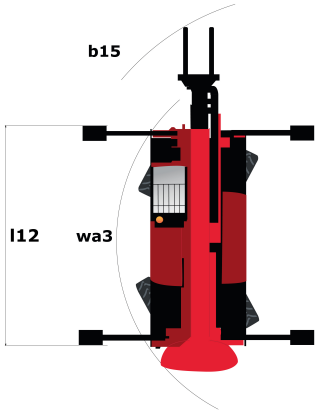

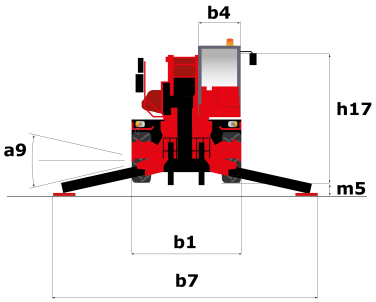

Other data		Metric	Imperial
Overall length (with forks)	l1	9.02 m	29 ft 7 in
Length to face of forks	l2	7.82 m	25 ft 8 in
Length of frame	l14	5.62 m	18 ft 5 in
Wheelbase	y	3.25 m	10 ft 8 in
Ground clearance	m4	0.35 m	1 ft 2 in
Counterweight offset (turret at 90°)	a7	3.42 m	11 ft 3 in
Tilt-up angle	a4	12 °	12 °
Tilt-down angle	a5	108 °	108 °
Overall length at stabilisers	l12	5.62 m	18 ft 5 in
Outer frame turning radius	Wa3	4.9 m	16 ft 1 in
Outer turning radius (with forks)	b15	6.49 m	21 ft 4 in
Overall width	b1	2.49 m	8 ft 2 in
Overall width with stabilisers extended	b7	6.06 m	19 ft 11 in
Overall cab width	b4	0.99 m	3 ft 3 in
Overall height	h17	3.05 m	10 ft
Frame levelling corrector	a9	+/- 7.4 °	+/- 7.4 °
Ground clearance under front tires on stabilizers	m5	0.32 m	1 ft 1 in

Load chart

Machine on lowered stabilisers with forks Metric

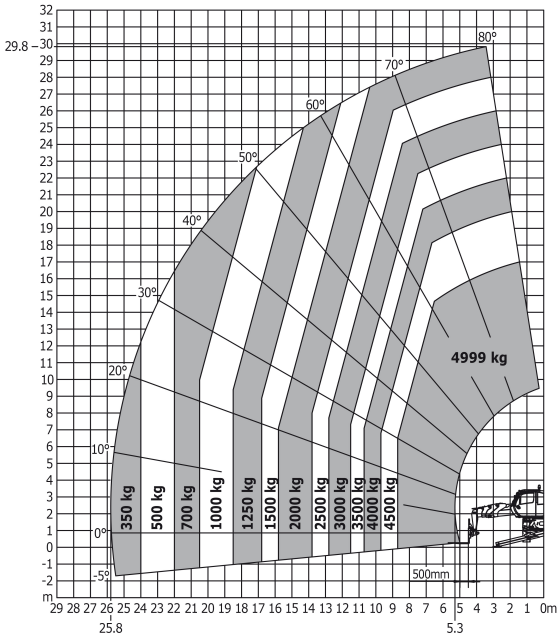

Machine on lowered stabilisers with forks Imperial

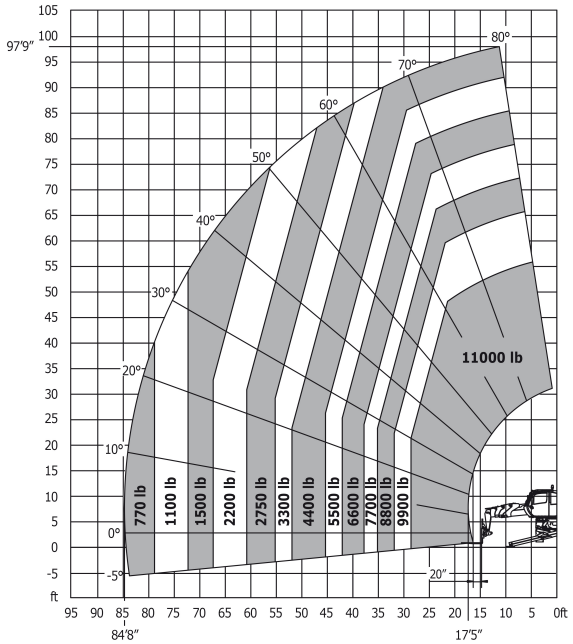

Machine on lowered stabilisers with winch 5000 kg Metric

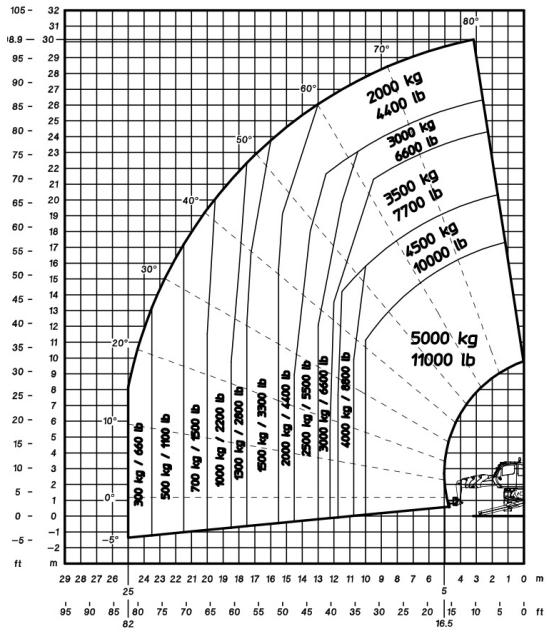

Machine on tyres with forks Imperial

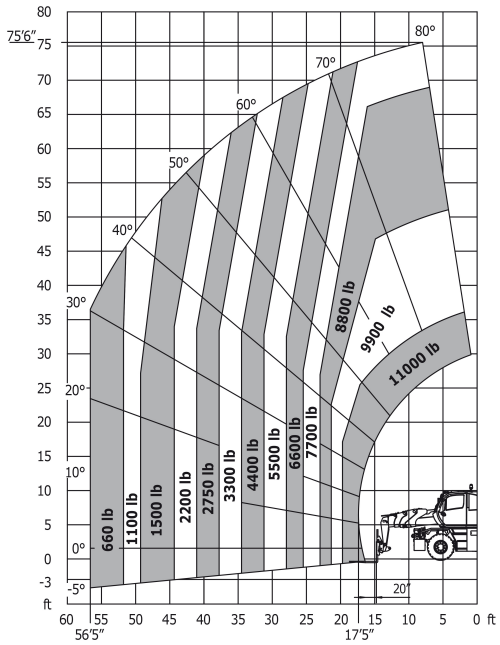

Machine on lowered stabilisers with 1500 kg jib Metric

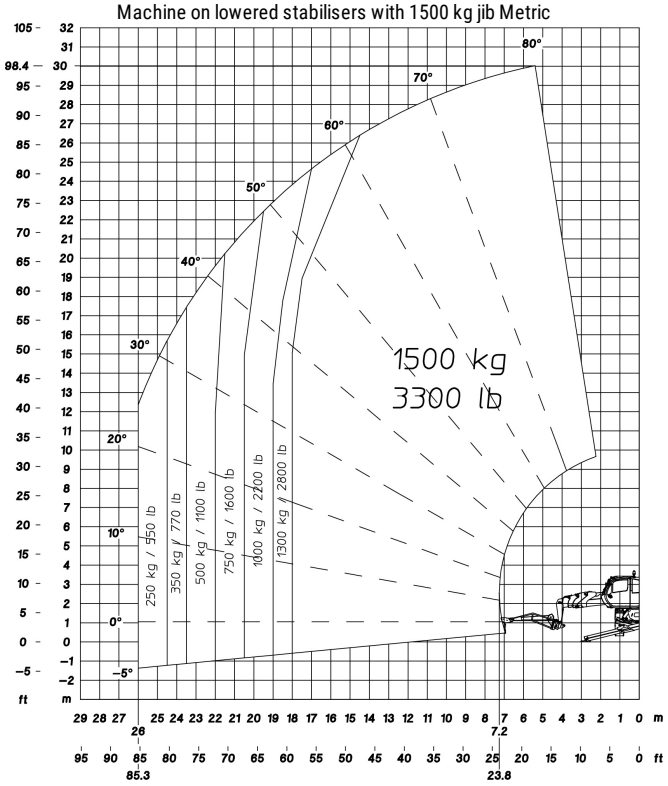

Machine on lowered stabilisers with 365 kg platform Metric

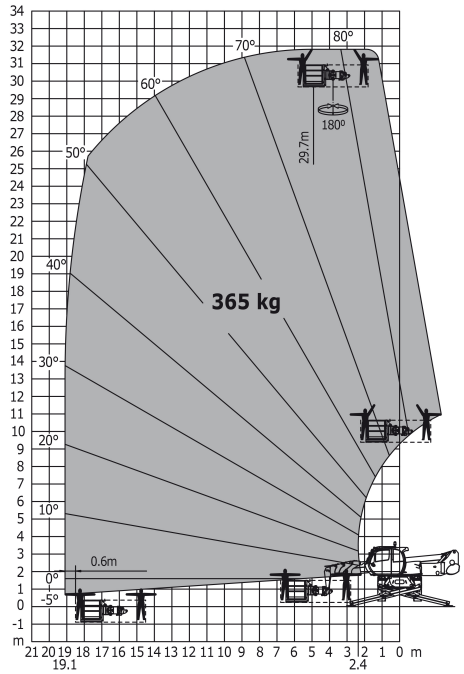

Machine on lowered stabilisers with 1000 kg platform Metric

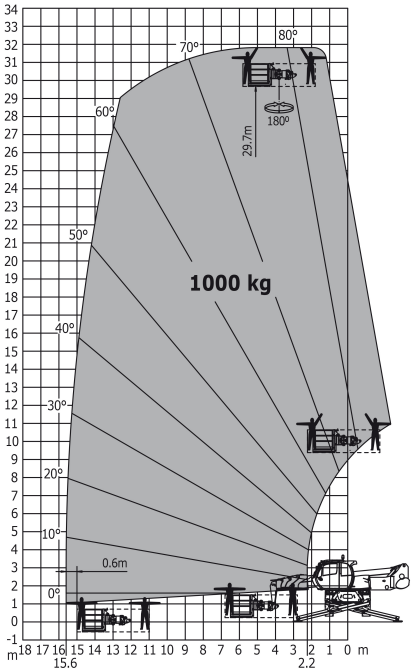

Machine on tyres with forks Metric

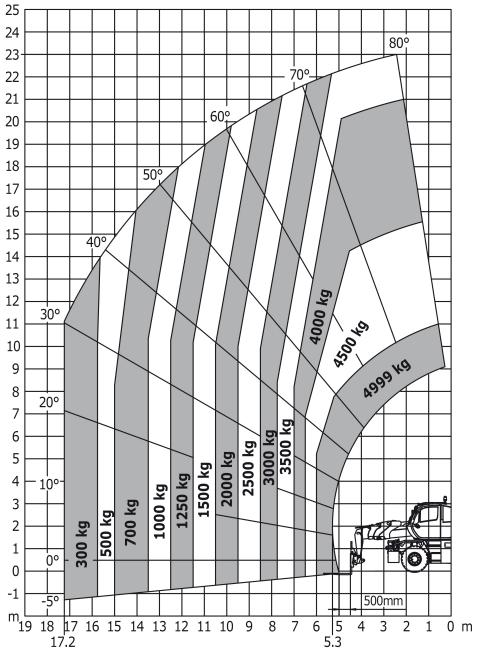

MANITOU
HANDLING YOUR WORLD

Siège Social
430 rue de l'Aubinière - 44150 Ancenis Cedex - France
Tel: +33(0)2 40 09 10 11 - Fax: +33 (0)2 40 09 10 97
www.manitou.com



This brochure describes versions and configuration options for Manitou products which may be fitted with different equipment. The equipment described in this brochure may be standard, optional or not available depending on version. Manitou reserves the right to change the specifications shown and described at any time and without prior warning. The manufacturer is not liable for the specifications given. For more information, contact your Manitou dealer. Non-contractual document. Product descriptions may differ from actual products. List of specifications is not comprehensive. The logos and visual identity of the company are the property of Manitou and may not be used without authorisation. All rights reserved. The photos and diagrams contained in thisbrochure are provided for information only.
MANITOU BF SA - Limited company with board of directors - Share capital: 39,668,399 euros - 857 802 508 RCS Nantes